240W Economical Security/Fire Alarm PSU with Battery Charger/UPS LAD-240 series

UL62368-1 TPTC004 AS/NZS62368.1 IEC62368-1 (Note 5)

Security Industrial Network Telecom

Features

- Built-in battery charger and UPS function
- TTL signals for status detection:
  AC OK, Battery disconnect, Battery reverse polarity, Battery low, Battery full and Discharge
- Built-in AC and battery circuit ON/OFF switchs enhance safetyness during maintenance
- Forced UPS mode for battery maintenance
- Protections: Short circuit / Overload / Over voltage / Over temperature / Battery low voltage / Battery reverse polarity (No damage)
- -20 ~ +60℃ wide operating temperature
- Output voltage adjustable (-20%~+5%) for CH1 by VR
- Suitable for lead acid and lithium-ion batteries
- Design refer to GB17945 system requirement
- 1U low profile (30 mm)
- 3 years warranty

Applications

- Fire emergency and evacuation system
- Public safety battery back-up
- Security system
- Uninterruptible DC-UPS system
- Central monitoring system
- Industrial automation

GTIN CODE

MW Search: https://www.meanwell.com/serviceGTIN.aspx

Description

LAD-240 series is a 240W economical AC/DC low profile security power supply with UPS function. Adopting the input range from 90Vac to 264Vac (115Vac/230Vac selectable by switch) and supports output 13.8V, 27.6V, 41.5V and 55.2Vdc. With high efficiency up to 88% and built-in AC, battery switch for easy maintenance. In addition, LAD-240 series also provide TTL signals for AC OK, battery disconnect, battery reverse polarity (No damage), battery low detection, battery full and discharge, to allow easy integration into security and fire systems directly.

Model Encoding

LAD - 240 B

- B: Output voltage(A: 13.8V, B: 27.6V, C: 41.5V, D: 55.2V)
- 240: Rated wattage
- LAD: Series name

SPECIFICATION

MODEL		LAD-240A		LAD-240B		LAD-240C		LAD-240D	
OUTPUT	OUTPUT NUMBER	CH1	CH2	CH1	CH2	CH1	CH2	CH1	CH2
	DC VOLTAGE	13.8V	13.8V	27.6V	27.6V	41.5V	41.5V	55.2V	55.2V
	RATED CURRENT	16.4A	1A(Battery Charger)	7.7A	1A(Battery Charger)	4.78A	1A(Battery Charger)	3.4A	1A(Battery Charger)
	CURRENT RANGE	0 ~ 17.4A	--------	0 ~ 8.7A	--------	0 ~ 5.78A	--------	0 ~ 4.4A	--------
	RATED POWER	240.12W		240.12W		239.87W		242.88W	
	RIPPLE & NOISE (max.) Note.2	150mVp-p	--------	150mVp-p	--------	240mVp-p	--------	240mVp-p	--------
	VOLTAGE ADJ. RANGE	CH1: 10.8 ~ 14.5V		CH1: 21.6 ~ 29V		CH1: 32.4 ~ 43.5V		CH1: 43.5 ~ 58V	
	VOLTAGE TOLERANCE Note.3	±1.5%	--------	±1.0%	--------	±1.0%	--------	±0.5%	--------
	LINE REGULATION	±0.5%	--------	±0.5%	--------	±0.5%	--------	±0.5%	--------
	LOAD REGULATION	±1.0%	--------	±0.5%	--------	±0.5%	--------	±0.5%	--------
	SETUP, RISE TIME	2000ms, 50ms/230VAC 2000ms, 50ms/115VAC at full load							
	HOLD UP TIME (Typ.)	16ms/230VAC 12ms/115VAC at full load							
	BATTERY STATIC DISCHARGE CURRENT	<100μA							
INPUT	VOLTAGE RANGE	90 ~ 132VAC / 180 ~ 264VAC by switch 240 ~ 370VDC (Default switch at 230VAC)							
	FREQUENCY RANGE	47 ~ 63Hz							
	EFFICIENCY (Typ.)	85.5%		87.5%		88%		88%	
	AC CURRENT (Typ.)	4.4A/115VAC 2.4A/230VAC							
	INRUSH CURRENT (Typ.)	COLD START 60A/115VAC 60A/230VAC							
	LEAKAGE CURRENT	<0.5mA / 240VAC							
PROTECTION	OVERLOAD	CH1:105 ~ 135% CH2:90 ~ 110%							
		Protection type : CH1 OLP, CH2 with battery: The unit will enter to UPS mode when CH1 is around 105%~120%, when total output of CH1 + CH2 reach around 125%~135% output shuts down CH1 OLP, CH2 without battery:Shut down o/p voltage,re-power on to removed CH2 : Constant current limiting; fault condition does not affect CH1 working,recovers automatically after fault condition is removed (External fuse is mandatory in series connection with battery for protection)							
	OVER VOLTAGE	CH1:15.5 ~ 18V		CH1:31 ~ 36V		CH1:47 ~ 55V		CH1:59 ~ 69V	
		Protection type : Shut down o/p voltage, re-power on to removed							
	OVER TEMPERATURE	Protection type : Shut down o/p voltage, re-power on to removed							
	BATTERY REVERSE POLARITY	Protected when reverse polarity , no damage, recovers automatically after fault condition is removed							
	BATTERY CUTOFF	9.5V±0.5V		21.5V±0.5V		32V±0.5V		43V±0.5V	
FUNCTION	AC OK	TTL signal, High / Open : AC Fail ; Low : AC OK ; Ice : max. 30mA@ 50VDC							
	BATTERY DISCONNECT/ REVERSE POLARITY	TTL signal, High / Open : Battery connect/normal ; Low : Battery disconnect/reverse polarity; Ice : max. 30mA@ 50VDC							
	BATTERY LOW	TTL signal, High / Open : Battery normal ; Low : Battery low; Ice : max. 30mA@ 50VDC							
	BATTERY FULL	TTL signal, High / Open : Battery charging ; Low : Battery full ; Ice : max. 30mA@ 50VDC							
	DISCHARGE	TTL signal, High / Open : Charge ; Low : Discharge ; Ice : max. 30mA@ 50VDC							
ENVIRONMENT	WORKING TEMP.	-20 ~ +60℃ (Refer to "Derating Curve")							
	WORKING HUMIDITY	20 ~ 95% RH non-condensing							
	STORAGE TEMP., HUMIDITY	-30 ~ +85℃, 10 ~ 95% RH non-condensing							
	TEMP. COEFFICIENT	±0.03%/℃ (0 ~ 50℃)							
	VIBRATION	10 ~ 500Hz, 5G 10min./1cycle, 60min. each along X, Y, Z axes							
SAFETY & EMC (Note 4 & 5)	SAFETY STANDARDS	UL62368-1, BS EN/EN62368-1, AS/NZS62368.1, EAC TP TC 004 approved; Design refer to GB 17945-2010							
	WITHSTAND VOLTAGE	I/P-O/P:3KVAC I/P-FG:2KVAC O/P-FG:0.5KVAC							
	ISOLATION RESISTANCE	I/P-O/P, I/P-FG, O/P-FG:100M Ohms / 500VDC / 25℃/ 70% RH							
	EMC EMISSION	**Parameter**		**Standard**		**Test Level / Note**			
		Conducted		BS EN/EN55032 (CISPR32), EAC TP TC 020		Class A			
		Radiated		BS EN/EN55032 (CISPR32), EAC TP TC 020		Class A			
		Harmonic Current		-----		-----			
		Voltage Flicker		-----		-----			
	EMC IMMUNITY	**Parameter**		**Standard**		**Test Level / Note**			
		ESD		BS EN/EN61000-4-2		Level 3, 8KV air ; Level 2, 6KV contact; criteria A			
		Radiated		BS EN/EN61000-4-3		Level 3, 10V/m ; criteria A			
		EFT / Burst		BS EN/EN61000-4-4		Level 3, 2KV ; criteria A			
		Surge		BS EN/EN61000-4-5		Level 3, 1KV/Line-Line ;2KV/Line-FG ;criteria A			
		Conducted		BS EN/EN61000-4-6		Level 3, 10V ; criteria A			
		Magnetic Field		BS EN/EN61000-4-8		Level 4, 30A/m ; criteria A			
OTHERS	MTBF	1394.9K hrs min. Telcordia SR-332 (Bellcore); 156.7K hrs min. MIL-HDBK-217F (25℃)							
	DIMENSION	215*115*30mm (L*W*H)							
	PACKING	0.75Kg; 15pcs/12.25Kg/0.7CUFT							

NOTE

1. All parameters NOT specially mentioned are measured at 230VAC input, rated load and 25℃ of ambient temperature.
2. Ripple & noise are measured at 20MHz of bandwidth by using a 12" twisted pair-wire terminated with a 0.1 μF & 47 μF parallel capacitor.
3. Tolerance : includes set up tolerance, line regulation and load regulation.
4. The power supply is considered a component which will be installed into a final equipment. All the EMC tests are been executed by mounting the unit on a 360mm*360mm metal plate with 1mm of thickness. Radiation testing requires adding 13*26*30NIZN magnetic loops or buckles to the battery output wire. The final equipment must be re-confirmed that it still meets EMC directives. For guidance on how to perform these EMC tests, please refer to "EMI testing of component power supplies." (as available on https://www.meanwell.com//Upload/PDF/EMI_statement_en.pdf)
5. This power supply does not meet the harmonic current requirements outlined by BS EN/EN61000-3-2. Please do not use this power supply under the following conditions:
   a) the end-devices is used within the European Union, and
   b) the end-devices is connected to public mains supply with 220Vac or greater rated nominal voltage, and
   c) the power supply is:
      - installed in end-devices with average or continuous input power greater than 75W, or
      - belong to part of a lighting system

   Exception:
   Power supplies used within the following end-devices do not need to fulfill BS EN/EN61000-3-2
   a) professional equipment with a total rated input power greater than 1000W;
   b) symmetrically controlled heating elements with a rated power less than or equal to 200W
6. The ambient temperature derating of 3.5℃/1000m with fanless models and of 5℃/1000m with fan models for operating altitude higher than 2000m(6500ft).

※ Product Liability Disclaimer : For detailed information, please refer to https://www.meanwell.com/serviceDisclaimer.aspx

■ Block Diagram

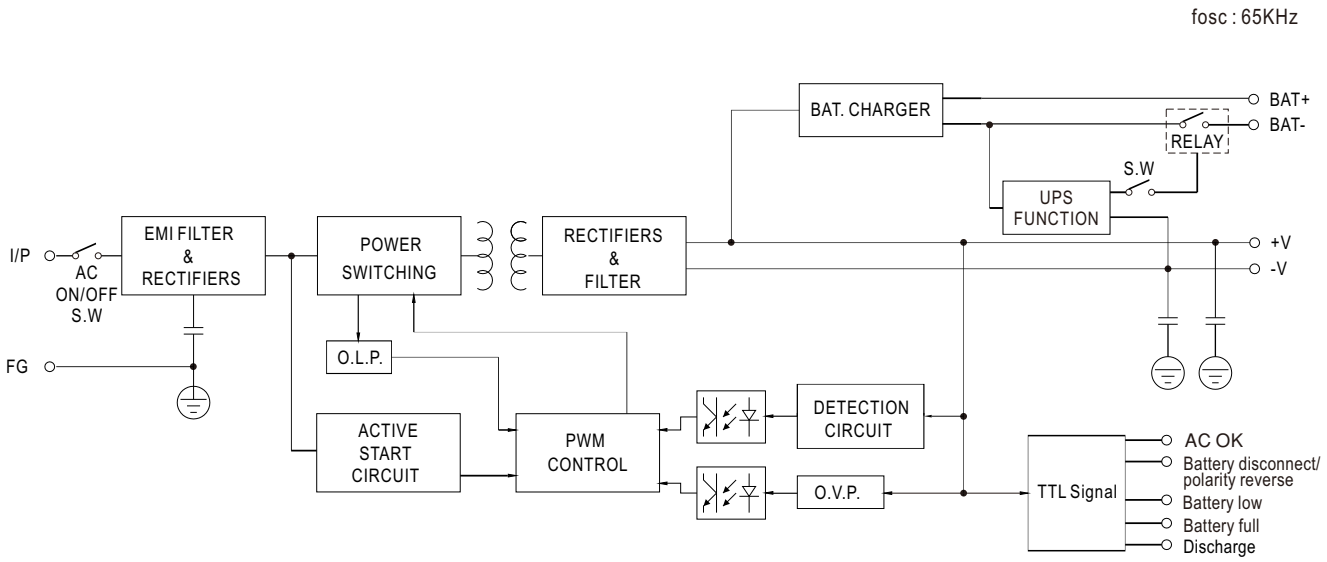

■ Derating Curve

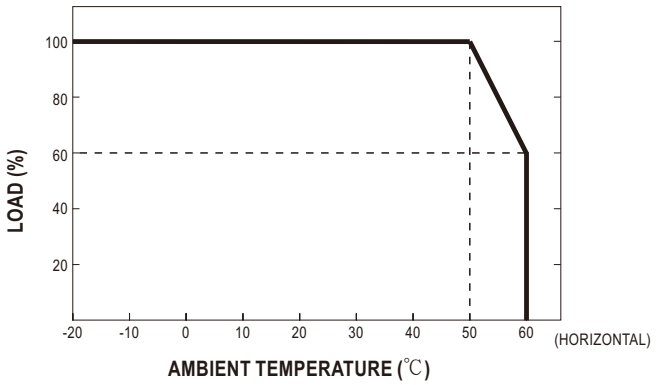

■ Static Characteristics

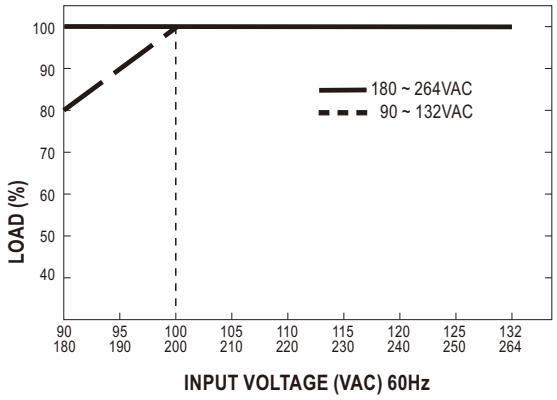

■ Suggested Application

1.DC-UPS function

When AC voltage is abnormal,The UPS function will activate and power source switch battery backup.

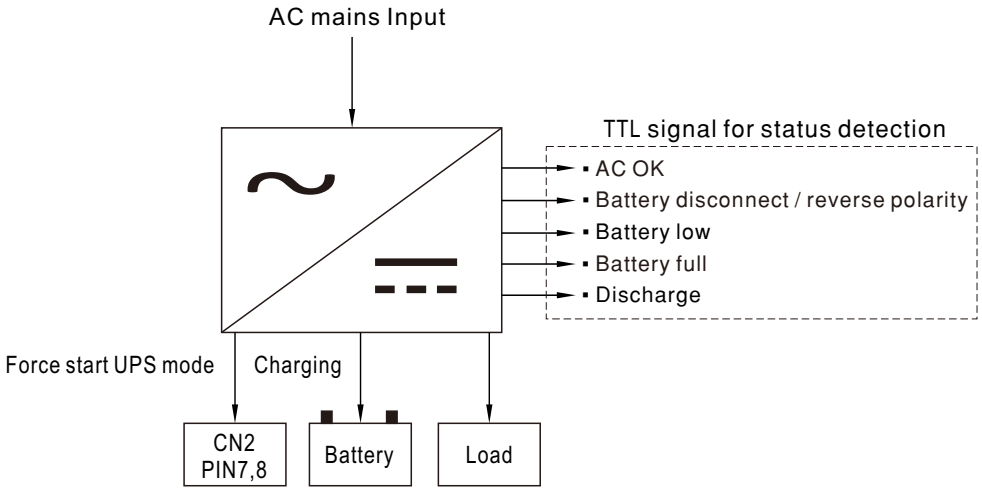

2.Function signals by TTL

- TTL Signal is sent out through pins from CN2.
- External voltage source is required for the TTL signal. The maximum voltage is 50VDC and the maximum sink current is 30mA.

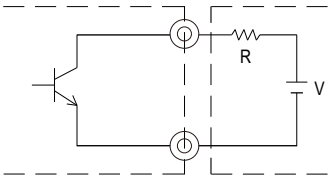

External voltage and resistor
(The max. sink current is 30mA at 50VDC)

2.1 AC OK : Detection of AC status

Between pin 1 and pin 4	Description
Low (0.3V max. at 30mA)	The signal is "Low" when the AC input is normal
High or open (External applied voltage 50V max.)	The signal turns to be "High" when the AC input is abnormal

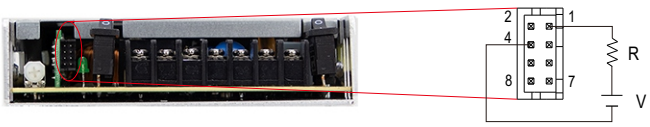

2.2 Battery Disconnected/Reverse Polarity: Battery status detection

Between pin 2 and pin 4	Description
Low (0.3V max. at 30mA)	The signal is "Low" when the battery is not connected or inversely connected
High or open (External applied voltage 50V max.)	The signal turns to be "High" when the battery is connected or normal

Note. The signals of battery disconnected and reverse polarity can only be detected during the first power transmission , it is can not be detected at any time.

2.3 Battery Low: Battery low detection

Between pin 3 and pin 4	Description
Low (0.3V max. at 30mA)	The signal is "Low" when the battery is under voltage protected
High or open (External applied voltage 50V max.)	The signal turns to be "High" when the battery is normal

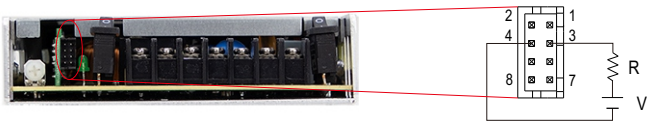

2.4 Battery Full：Battery full detection

Between pin 4 and pin 5	Description
Low (0.3V max. at 30mA)	The signal is "Low" when the battery is fully charged
High or open (External applied voltage 50V max.)	The signal turns to be "High" when the battery is charged

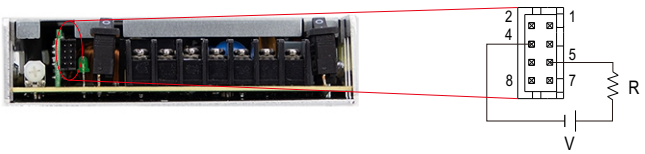

2.5 Discharge: Discharge detection

Between pin 4 and pin 6	Description
Low (0.3V max. at 30mA)	The signal is "Low" when the power supply is discharging
High or open (External applied voltage 50V max.)	The signal is "High" when the main power is working

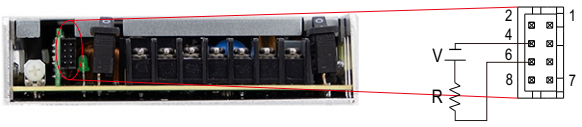

2.6 Forced Start: Forced start UPS mode

Pin 7 & 8	Status
Short	Forced start UPS mode
Open	Normal

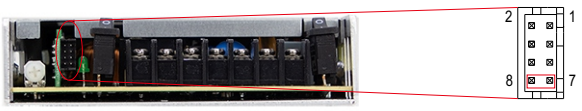

■ Mechanical Specification

(Unit: mm , tolerance ± 1mm)

Case No. 207

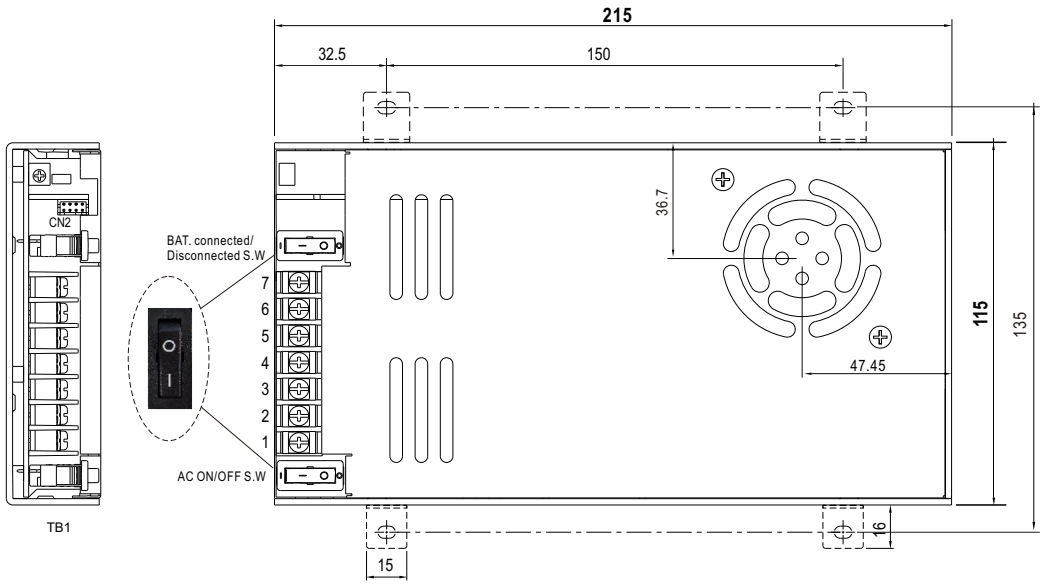

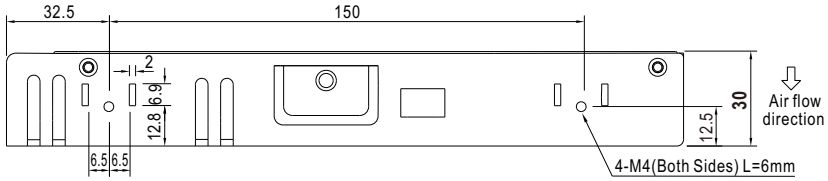

※ Connector Pin No. Assignment(CN2)

Pin No.	Assignment(TTL Signal)	Mating Housing	Terminal
1	AC OK	TKP DH2 or equivalent	TKP DHT-1S(LF) or equivalent
2	Battery disconnect/ reverse polarity		
3	Battery low		
4	GND		
5	Battery full		
6	Discharge		
7,8	Open : normal Short : forced start UPS mode		

※ Terminal Pin No. Assignment(TB1)

Pin No.	Assignment
1	AC/L
2	AC/N
3	FG ⏚
4	DC OUTPUT -V
5	DC OUTPUT +V
6	BAT -
7	BAT +

⚠ DC OUTPUT -V and BAT - can not be shorted.

■ Accessory List

※ Bracket (Optional accessory, Should ordered seperately)

MW's Order No.	Item	Quantity
PGG2MHS012		4pcs/per model

■ Installation Diagram

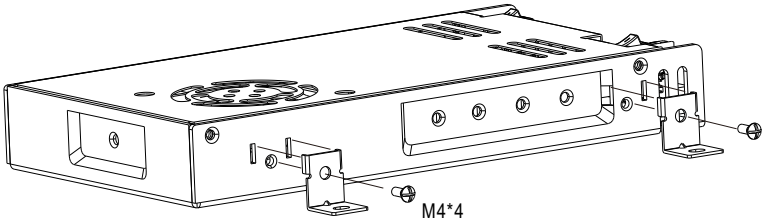

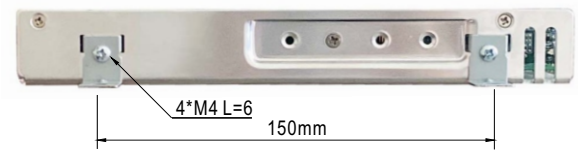

■ Installation Manual

Please refer to : http://www.meanwell.com/manual.html