60W Single Output with Battery Charger(UPS Function) PSC-60 series

■ Features :

- Universal AC input / Full range
- Models with **L-Bracket and cover available (PSC-60x-C, x=A,B)**
- Protections: Short circuit / Overload / Over voltage
- Battery low protection / Battery reverse polarity protection by fuse
- Alarm signal for AC OK and Battery reverse low
- Cooling by free air convection
- 100% full load burn-in test
- 2 years warranty

UL62368-1 BS EN/EN62368-1 TPTC004 IEC62368-1

■ GTIN CODE

MW Search: https://www.meanwell.com/serviceGTIN.aspx

SPECIFICATION

PSC-60A [-C] [ ] =Blank,-C ; Blank=PCB only, -C=Enclosed type

MODEL		PSC-60A [ ]		PSC-60B [ ]	
OUTPUT	OUTPUT NUMBER	CH1	CH2	CH1	CH2
	DC VOLTAGE	13.8V	13.8V	27.6V	27.6V
	RATED CURRENT	2.8A	1.5A	1.4A	0.75A
	CURRENT RANGE	0 ~ 4.3A	--------	0 ~ 2.15A	--------
	RATED POWER	59.34W		59.34W	
	RIPPLE & NOISE (max.) Note.2	120mVp-p	--------	240mVp-p	--------
	VOLTAGE ADJ. RANGE	CH1: 12 ~ 15V		CH1: 24 ~ 29V	
	VOLTAGE TOLERANCE Note.3	±1.0%	--------	±1.0%	--------
	LINE REGULATION	±0.5%	--------	±0.5%	--------
	LOAD REGULATION	±0.5%	--------	±0.5%	--------
	SETUP, RISE TIME Note.4	800ms, 50ms/230VAC 1600ms, 50ms/115VAC at full load			
	HOLD UP TIME (Typ.)	50ms/230VAC 10ms/115VAC at full load			
INPUT	VOLTAGE RANGE	90 ~ 264VAC 127 ~ 370VDC			
	FREQUENCY RANGE	47 ~ 63Hz			
	EFFICIENCY (Typ.)	84%		84%	
	AC CURRENT (Typ.)	1.6A/115VAC 1A/230VAC			
	INRUSH CURRENT (Typ.)	COLD START 30A/115VAC 60A/230VAC			
	LEAKAGE CURRENT	<1mA / 240VAC			
PROTECTION	OVERLOAD	105 ~ 150% rated output power			
		Protection type : Hiccup mode, recovers automatically after fault condition is removed			
	OVER VOLTAGE	CH1:14.49 ~ 18.63V		CH1:28.98 ~ 37.26V	
		Protection type : Hiccup mode, recovers automatically after fault condition is removed			
	BATTERY CUT OFF	10.5±0.5V		21±1V	
FUNCTION	AC OK	TTL open collector output, ON : AC OK ; OFF : AC Fail ; Ice : max. 30mA@ 50VDC			
	BATTERY LOW	TTL open collector output, ON : Battery Low ; OFF : Battery OK ; Ice : max. 30mA@ 50VDC			
		Battery low voltage : < 11V		Battery low voltage : < 22V	
ENVIRONMENT	WORKING TEMP.	-20 ~ +70℃ (Refer to "Derating Curve")			
	WORKING HUMIDITY	20 ~ 90% RH non-condensing			
	STORAGE TEMP., HUMIDITY	-20 ~ +85℃, 10 ~ 95% RH			
	TEMP. COEFFICIENT	±0.03%/℃ (0~50℃) on CH1 output			
	VIBRATION	10 ~ 500Hz, 2G 10min./1cycle, 60min. each along X, Y, Z axes			
SAFETY & EMC (Note 7)	SAFETY STANDARDS	UL62368-1, TUV BS EN/EN62368-1, EAC TP TC 004 approved			
	WITHSTAND VOLTAGE	I/P-O/P:3KVAC I/P-FG:2KVAC O/P-FG:0.5KVAC			
	ISOLATION RESISTANCE	I/P-O/P, I/P-FG, O/P-FG:100M Ohms / 500VDC / 25℃/ 70% RH			
	EMC EMISSION	Compliance to BS EN/EN55032 (CISPR32) Class B, BS EN/EN61000-3-2,-3, EAC TP TC 020			
	EMC IMMUNITY	Compliance to BS EN/EN61000-4-2,3,4,5,6,8,11, BS EN/EN55035, light industry level, EAC TP TC 020			
OTHERS	MTBF	3681.4K hrs min. Telcordia SR-332 (Bellcore) ; 589.7K hrs min. MIL-HDBK-217F (25℃)			
	DIMENSION	PCB:101.6*50.8*29mm (L*W*H) ; Enclosed type:103.4*62*37mm (L*W*H)			
	PACKING	PCB:0.13Kg; 96pcs/13.5Kg/1.39CUFT ; Enclosed type:0.29Kg; 45pcs/14Kg/0.63CUFT			

NOTE

1. All parameters NOT specially mentioned are measured at 230VAC input, rated load and 25℃ of ambient temperature.
2. Ripple & noise are measured at 20MHz of bandwidth by using a 12" twisted pair-wire terminated with a 0.1 μF & 47 μF parallel capacitor.
3. Tolerance : includes set up tolerance, line regulation and load regulation.
4. Length of set up time is measured at first cold start. Turning ON/OFF the power supply may lead to increase of the set up time.
5. Heat sink HS1,HS2 can not be shorted.
6. Heat sink HS1 must have safety isolation distance with system case.
7. The power supply is considered a component which will be installed into a final equipment. All the EMC tests are been executed by mounting the unit on a 360mm*360mm metal plate with 1mm of thickness. The final equipment must be re-confirmed that it still meets EMC directives. For guidance on how to perform these EMC tests, please refer to "EMI testing of component power supplies." (as available on https://www.meanwell.com//Upload/PDF/EMI_statement_en.pdf)
8. The ambient temperature derating of 3.5℃/1000m with fanless models and of 5℃/1000m with fan models for operating altitude higher than 2000m(6500ft).

※ Product Liability Disclaimer : For detailed information, please refer to https://www.meanwell.com/serviceDisclaimer.aspx

■ Mechanical Specification

(Unit: mm , tolerance ± 1mm)

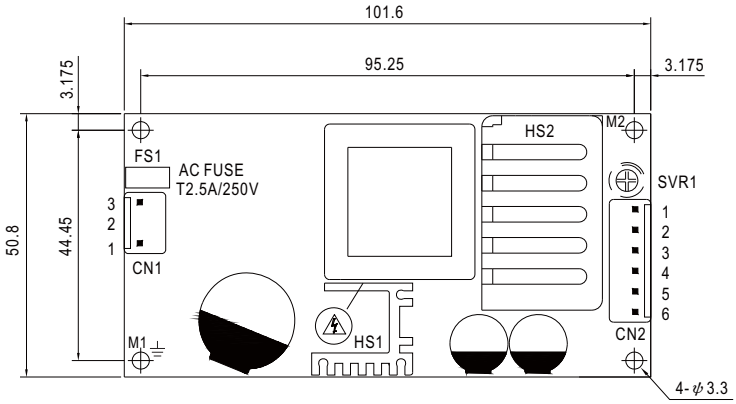

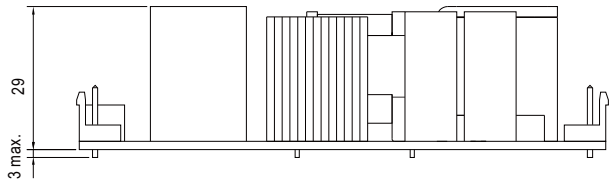

1.HS1,HS2 can not be shorted.
2.HS1 must have safety isolation distance with system case.
3.M1 is safety ground. For better EMC performance,Please secure an electrical connection between M1,M2 and chassis grounding.

AC Input Connector (CN1) : JST B3P-VH or equivalent

Pin No.	Assignment	Mating Housing	Terminal
1	AC/N	JST VHR or equivalent	JST SVH-21T-P1.1 or equivalent
2	No Pin		
3	AC/L		

DC Output Connector (CN2) : JST B6P-VH or equivalent

Pin No.	Assignment	Pin No.	Assignment	Mating Housing	Terminal
1	Bat. Low	4	Battery +	JST VHR or equivalent	JST SVH-21T-P1.1 or equivalent
2	AC OK	5	DC Output +		
3	Battery -	6	DC Output COM		

⏚ : Grounding Required

Unit:mm

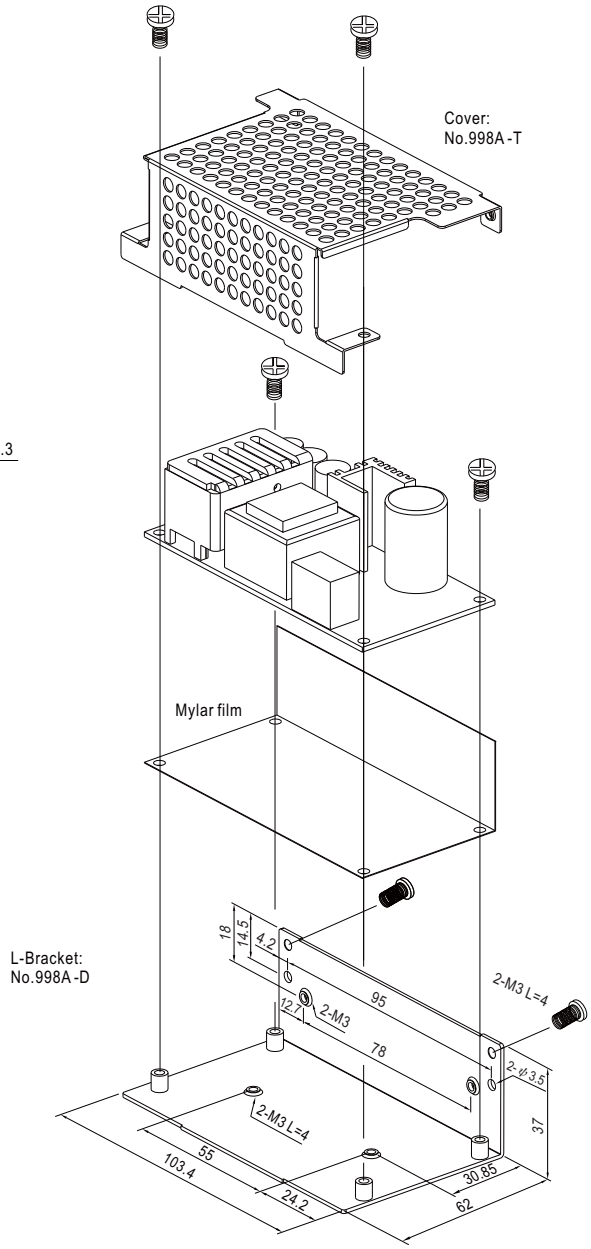

■ Block Diagram

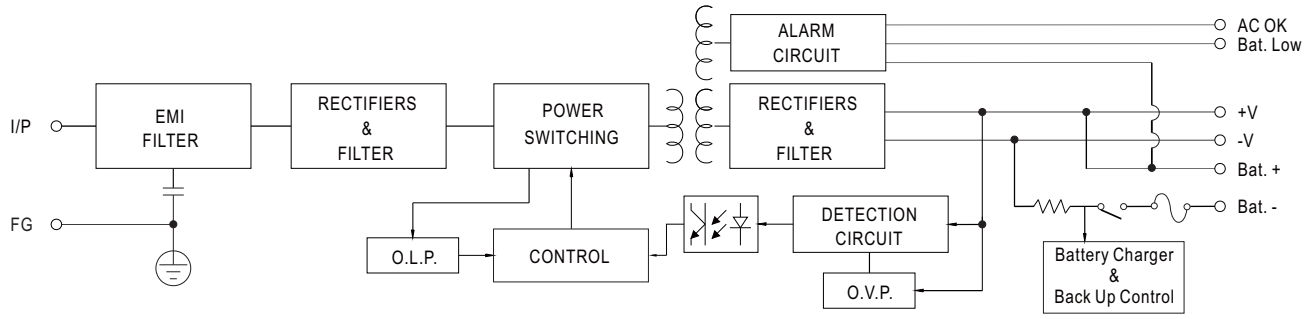

■ Output Derating

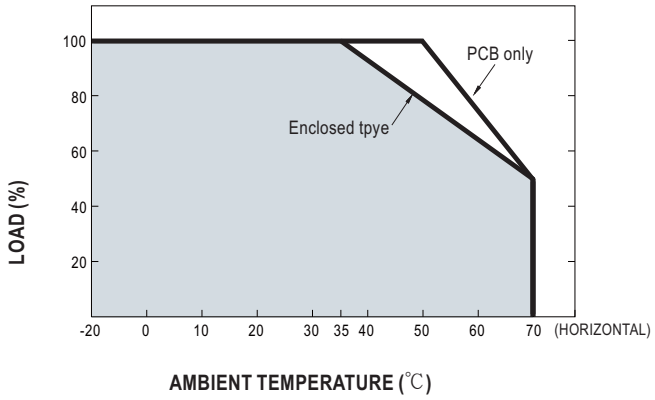

■ Output Derating VS Input Voltage

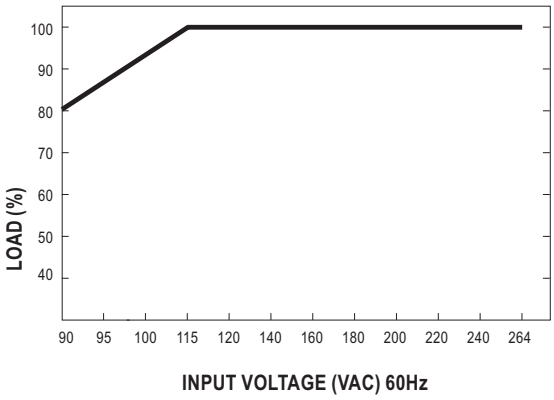

■ Suggested Application

1.Backup connection for AC interruption

(1) Please refer to the Fig1.1 for suggested connection.

The power supply charges the battery and provides energy to the load at the same time when the AC main is OK.

The battery starts to supply power to the load when the AC mains fails.

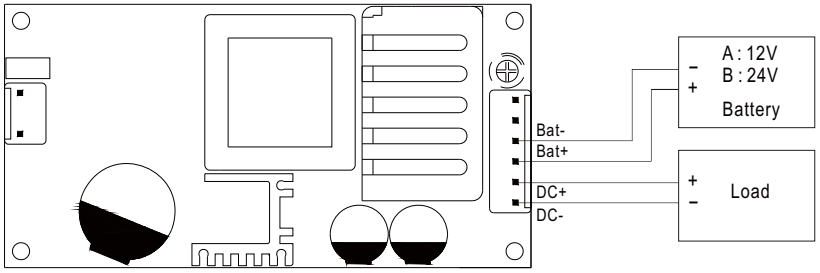

Fig 1.1 Suggested system connection

2.Alarm Signal for AC OK and Battery Low

(1) Alarm Signal is sent out through " AC OK " & " Battery Low " pins.

(2) An external voltage source is required for this function. The maximum applied voltage is 50V and the maximum sink current is 30mA.

(3) Table2.1 explains the alarm function built in the power supply

Function	Description	Output of alarm
AC OK	The signal is "Low" when the power supply turns on	Low (0.3V max. at 30mA)
	The signal turns to be "High" when the power supply turns OFF	High or open(External applied voltage 50V max.)
Battery Low	The signal is "Low" when the voltage of battery is under A:11V, B:22V	Low (0.3V max. at 30mA)
	The signal is "High" when the voltage of battery is above A:11V, B:22V	High or open(External applied voltage 50V max.)

Table 2.1 Explanation of Alarm Signal

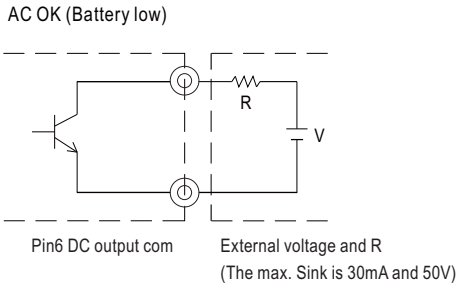

Fig 2.2 Internal circuit of AC OK (Battery Low)